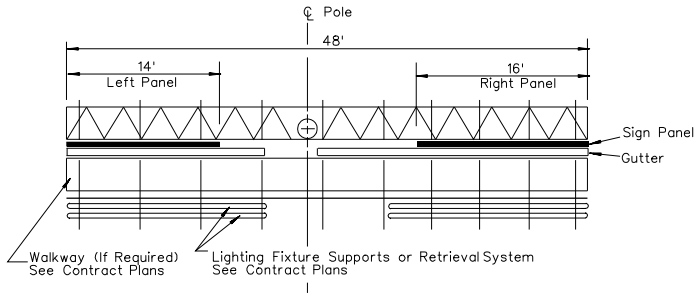

PLAN

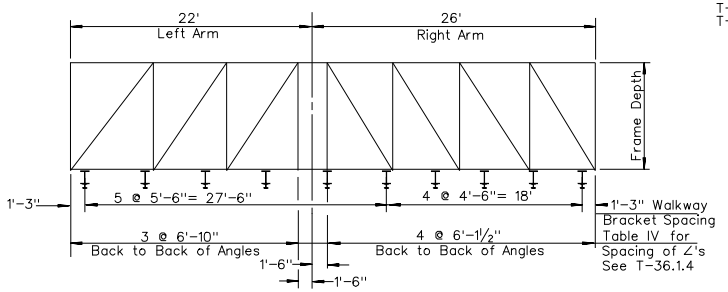

UNBALANCED SINGLE POST TYPE
EXAMPLE NO. 1

INSTRUCTIONS TO FABRICATOR

CONTRACT PLANS SHOW:

1. Sign Structure Type and Location
2. Length of Structure Frame
3. Panel Size and Locations on Structure
4. Post Type and Height To Bottom of Frame
5. Base Plate Elevation
6. Footing Elevation or Location of Alternate Pile Foundation
7. Photo Electric Cell Location If Required
8. Extent of Walkway Grating (If Required) and Type of Lighting System (Fixed or Luminaire Retrieval System)

REFER TO THE FOLLOWING SHEETS FOR DETAILS NOT SHOWN ON CONTRACT PLANS:

T-36.1.1 - Instructions & Examples
T-36.1.2 - Post Type II Thru VII
T-36.1.3 - Post Type I-S Thru VII-S
T-36.1.4 - Structural Frame Members (Single Post Type)
T-36.1.5 - Structural Frame Members (Two Post Type)
T-36.1.6 - Structural Frame Details
T-36.1.7 - Frame Juncture Details
T-36.1.8 - Removable Sign Panel Frames
T-36.1.8.1 - Removable Sign Panel Frames 110" and 120" Sign Panels
T-36.1.8.2 - Sign Extension Bracket Retrofit Methods A and B
T-36.1.9 & T-36.1.10 - Walkway Details No. 1 & No. 2
T-36.1.11 - Walkway Safety Railing Details
T-36.1.12 - Alternate Pile Foundations

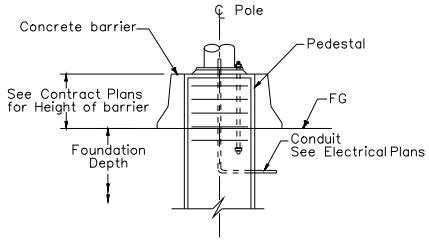

MEDIAN LOCATION

GENERAL NOTES AND SPECIFICATIONS:

DESIGN: A.A.S.H.T.O. SPECIFICATIONS FOR STRUCTURAL SUPPORTS FOR HIGHWAY SIGNS, LUMINAIRES, AND TRAFFIC SIGNALS, 4TH EDITION DATED 2001 (EXCLUDING SECTION II: FATIGUE DESIGN).

CONSTRUCTION: STANDARD SPECIFICATIONS FOR ROAD AND BRIDGE CONSTRUCTION AND THE SPECIAL PROVISIONS.

LOADING: BASIC WIND SPEED = 90 MPH
GROUP LOAD COMBINATIONS:
GROUP I - DEAD LOAD
GROUP II - DEAD LOAD + WIND LOAD
GROUP III - DEAD LOAD + ICE LOAD + ½WIND LOAD
WALKWAY LOADING:
DEAD LOAD + 500 LB. CONCENTRATED LIVE LOAD

UNIT STRESSES:
STRUCTURAL STEEL: Fy=36 ksi
REINFORCING STEEL: ASTM A615 Grade 60
CONCRETE PEDESTAL CLASS A OR AA: Fc=4000 psi
CONCRETE PILE CLASS D OR DA: Fc=4000 psi

FOOTING SOIL PRESSURE: 1¼ TONS/SQ.FT.

MINIMUM CLEARANCE: VERTICAL ROADWAY CLEARANCE 18'

WELDING: ALL WELDING CONTINUOUS UNLESS OTHERWISE NOTED ON THE PLANS. ALL WELDING TO DONE IN ACCORDANCE WITH THE STANDARD SPECIFICATIONS FOR ROAD AND BRIDGE CONSTRUCTION.

FINISH: ALL STEEL PARTS TO BE HOT-DIPPED GALVANIZED AFTER FABRICATION EXCEPT AS SHOWN ON PLANS OR AS CALLED FOR IN SPECIAL PROVISIONS.

WALKWAY BRACKETS: MAINTAIN UNIFORM SPACING WHERE POSSIBLE. MAXIMUM SPACING SHALL NOT EXCEED 5'-6".

LIGHTING FIXTURE SUPPORTS: WHERE DISTANCE FROM WALKWAY BRACKET TO END OF SIGN PANEL EXCEEDS 1'-4", EXTEND LIGHTING FIXTURE SUPPORTS TO NEXT WALKWAY BRACKET. SEE EXAMPLE NO. 2.

WALKWAY AND SAFETY RAILING: WALKWAY (WHEN REQUIRED) TO BE CONTINUOUS FOR ENTIRE LENGTH OF FRAME FOR SINGLE POST SIGNS AND FOR 2 POST SIGNS FROM THE NEAREST POST CONTINUOUS ACROSS ALL THE SIGN PANELS. SAFETY RAILING TO PROTECT ENTIRE WALKWAY, BUT CONTINUOUS FOR NO MORE THAN 11" IN ONE UNIT.

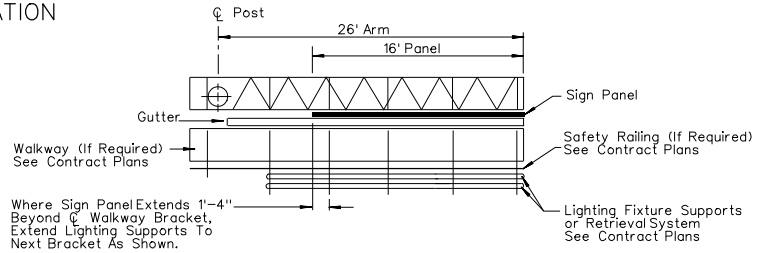

PLAN
CANTILEVER SINGLE
POST TYPE
EXAMPLE NO.2

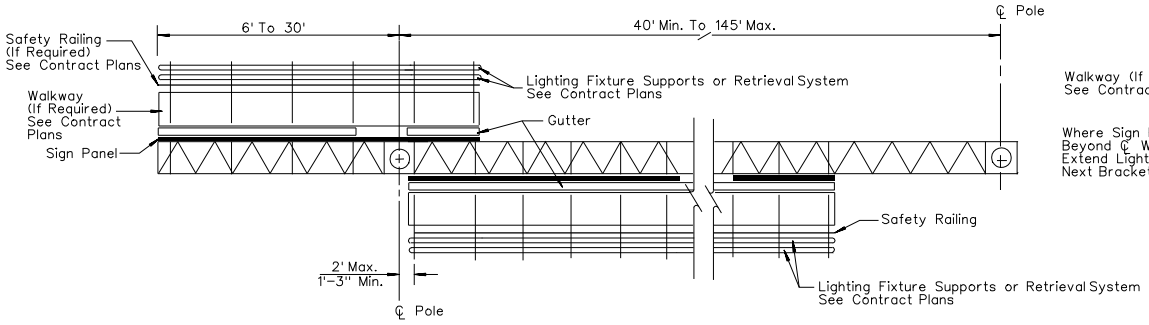

PLAN
TWO POST TYPE WITH CANTILEVER
(PART DOUBLE-FACED)
EXAMPLE NO. 3

NEVADA DEPARTMENT OF TRANSPORTATION

OVERHEAD SIGNS
INSTRUCTIONS & EXAMPLES

Signed Original On File	T-36.1.1	(627)
CHIEF BRIDGE ENGINEER	ADOPTED 11/95	REVISION 10/06