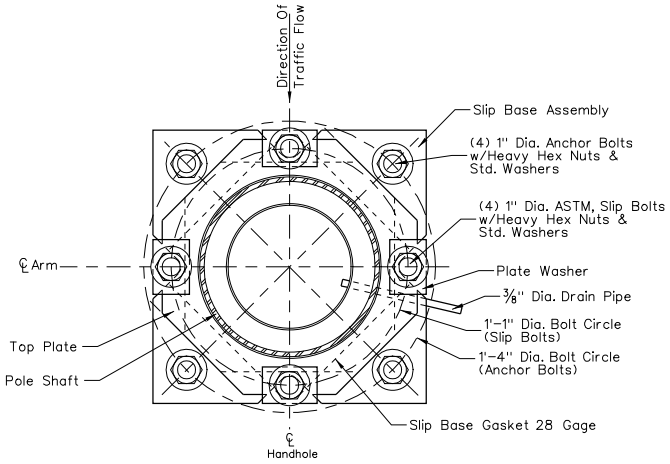

SAFETY BASE PLAN

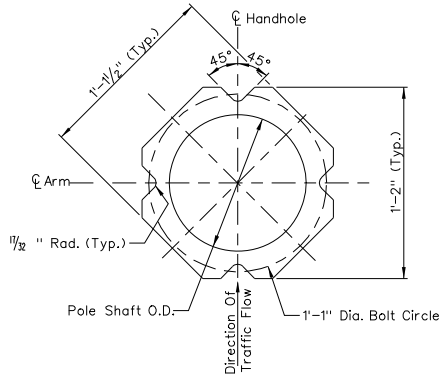

TOP PLATE PLAN

TOP PLATE ELEVATION

NOTES:

1. PLACE BOTTOM PLATE WITH SPACER PLATE ON LEVELING NUTS ON ANCHOR BOLTS AND FASTEN IN PLACE.
2. TOP PLATE SHALL BE FURNISHED BY LIGHT POLE FABRICATOR AS LIGHT POLE BASE PLATE WITH DIMENSIONS AS SHOWN IN PLAN VIEW.
3. ALL STEEL PLATE ASSEMBLIES SHALL BE HOT-DIP GALVANIZED AFTER FABRICATION.
4. ALL NUTS, BOLTS AND WASHERS SHALL BE ELECTRO-PLATED CADMIUM IN ACCORDANCE WITH ASTM B-766, TYPE NS.
5. ALL CONTACT AREAS OF PLATES SHALL BE FREE OF GALVANIZING BEADS OR RUNS.
6. SAFETY BASES SHALL BE UTILIZED ON ALL STEEL LIGHT POLES EXCEPT ON STRUCTURES OR IF PLACED BEHIND BARRIER RAIL OR GUARDRAIL.
7. GROUTING SHALL BE DONE AFTER LIGHT POLE HAS BEEN LOCATED IN FINAL POSITION.
8. ANCHOR BOLT SHALL NOT EXTEND ABOVE SLIP BASE GASKET.
9. SLIP BOLT TORQUING REQUIREMENTS:
   A. TORQUE ALL BOLTS TO 80 FT. LBS.
   B. LOOSEN BOLTS.
   C. RETIGHTEN TO FINAL TORQUE USING THE FOLLOWING SEQUENCES:

      1
   3 4
      2

   60 FT. LBS., 65 FT. LBS. THEN 70 FT. LBS.,
   RECHECK EACH BOLT FOR 70 FT. LBS.

   D. CAULK AREAS AROUND SLIP BASE GASKET. MATERIAL SHALL CONFORM TO FED. SPEC. NO. TT-S-230, TYPE II OR EQUAL.
   E. SPRAY CADMIUM BOLTS WITH GALVILITE COLD GALVANIZING COMPOUND OR EQUIVALENT.

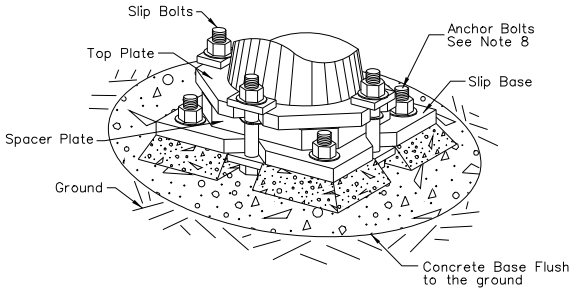

ISOMETRIC VIEW

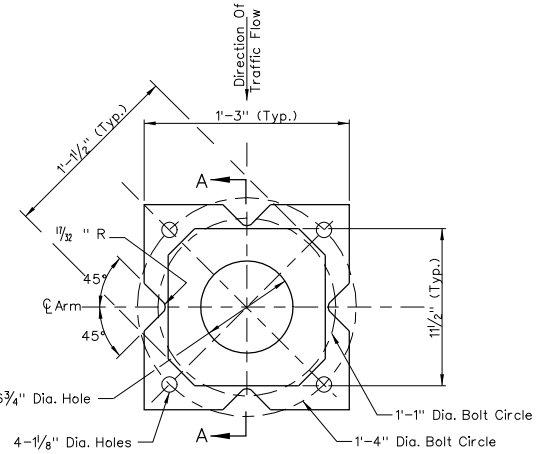

SLIP BASE & SPACER PLATE PLAN

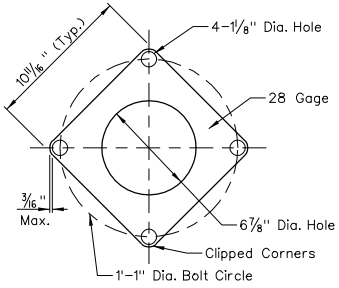

SLIP BASE GASKET

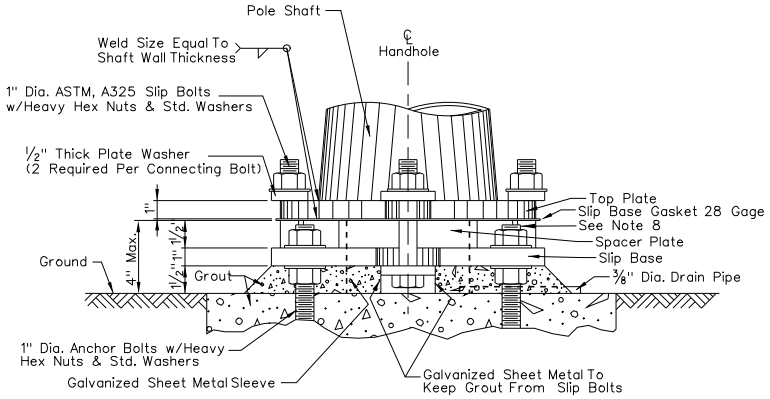

SAFETY BASE ELEVATION

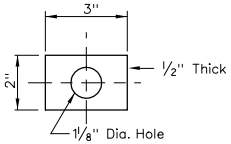

PLAN

PLATE WASHER

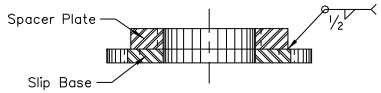

SECTION A-A

NEVADA DEPARTMENT OF TRANSPORTATION

SAFETY BASE

Signed Original On File	T-30.1.9	(623)
CHIEF SAFETY/TRAFFIC ENGR.	ADOPTED 1/91	REVISION 3/07